Item No. 14.0 - Guidance for filling of accident proforma circulated vide Railway Board letter No.2018/Safety(A&R)/1/8 dated 25.01.2019, on "Revision and Standardization of Observation/ Measurement of Accident Investigation / Inquiry" added.

IRICEN MONOGRAPH No. 1

ज्ञान ज्योति से मार्गदर्शन

To Beam As A Beacon of Knowledge

MONOGRAPH

ON

ICF ALL-COIL COACHES

MAY 2016

INDIAN RAILWAYS INSTITUTE OF CIVIL ENGINEERING
Pune 411001

FOREWORD

It has been endeavour of IRICEN to bring out publications which are useful to field staff. The book published by IRICEN on the subject of "Investigation of Derailment" is hugely popular amongst field staff of various disciplines. Shri V. K. Gupta, Member Engineering, desired that IRICEN should issue series of Monographs for various Rolling Stocks commonly used for Coaching, Freight and Loco operations for the guidance of field staff. First in this series is the Monograph on ICF All - Coil Coaches.

The purpose behind bringing out these Monographs is to educate the field staff and increase their awareness level as present day Accident Profarma of Accident Manual do not have adequate measurements for Rolling stock component which may be required to determine cause of accident. I hope that the Railwaymen from various disciplines would find this publication useful.

Pune,
May 2016

Vishwesh Chaubey
Director
IRICEN, PUNE

PREFACE

With the view to educate field officials and increase their awareness, it is proposed to issue series of Monographs for Rolling stock commonly used in Coaching, Freight and Loco operations.

It is the matter of pleasure to present before the readers, the first Monograph in this series for ICF All-coil Coaches which is the main stay of coaching operations on Indian Rlys. The contents in the Monographs are mainly from existing Maintenance Manual for BG Coaches of ICF Design and text book on the subject of "Investigation of Derailment" published by IRICEN. In case of any discrepancy or for more detailed knowledge on the subject readers are advised to refer to Maintenance Manual for BG Coaches of ICF Design.

I am grateful to Shri V.K Gupta, Member Engineering, Rly Board, who took keen interest in this publication and guided at various stages so that the publication remains of primary use for field staff of various disciplines. I am also grateful to Shri S. K. Pandey, ED CE (P) Rly Board, who made valuable suggestions, took keen interest and made lot of efforts in the publication of this document. I am grateful to Shri Vishwesh Chaubey, Director, IRICEN, who gave me opportunity for making these Monographs and also encouraged and guided from time to time for bringing out this publication. Special thanks are due to Shri Nilmani, ex. Professor (Track) IRICEN, now CPDE, N.F.Rly for checking the drafts tirelessly and for giving his valuable suggestions throughout the stage of preparation of this publication. I am thankful to faculty and staff of IRICEN who have contributed immensely for this publication. Efforts taken by Shri Mathew Varughese SI (M)-I in correcting the draft and scrutinizing the manuscript are also appreciated.

Although due care has been taken to include the details as per authentic and latest references in this publication, still there may be some errors. Therefore, suggestion from readers to improve the contents will be welcomed and can be sent to mail@iricen.gov.in which will be taken into account while bringing future editions.

Pune
May 2016

Gautam Birhade
Professor (Works)

FORTHCOMING MONOGRAPHS

- CASNUB Bogie
- LHB Coaches
- WDM3A (Co-Co Tri-Mount Bogie, similar to WAG5)
- WDG3A (High Adhesion Bogie, similar to WAG7, WDM3D)
- WDP4 (HTSC Bogie, similar to WDG4)
- WAP7 (Co-Co Flexi-coil Fabricated Bogie, similar to WAG9)
- WAP5 (Bo-Bo Flexi-coil Fabricated Bogie)

CONTENTS

1.0 General

The bogie frame and components of ICF All-Coil Bogie are of all-welded light construction with a wheel base of 2.896 metre. The wheel sets are provided with self-aligning spherical roller bearings mounted in cast steel axle box housing. Helical coil springs are used in both primary and secondary suspension. The weight of the coach is transferred through side bearers on the bogie bolsters. The ends of the bogie bolster rest on the bolster helical springs placed over the lower spring beam suspended from the bogie frame. A Photograph of ICF All- Coil Coach and Bogie is shown in Figure 1. General arrangement of ICF All-coil Bogie is shown in Figure 2 and 3.

Figure 1: Full View of ICF Coach

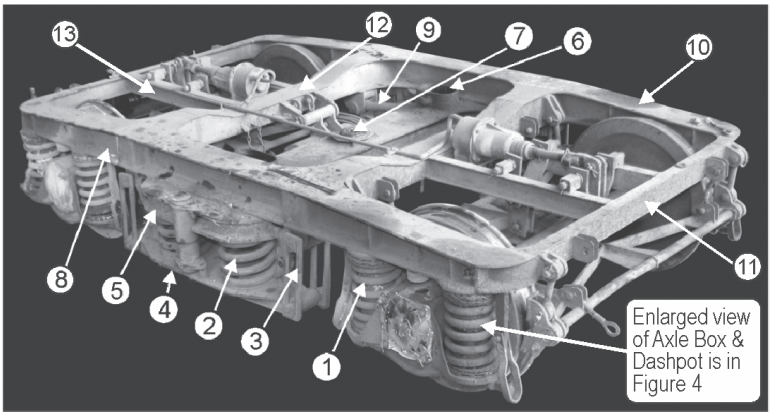

Figure 2: ICF All-Coil Bogie

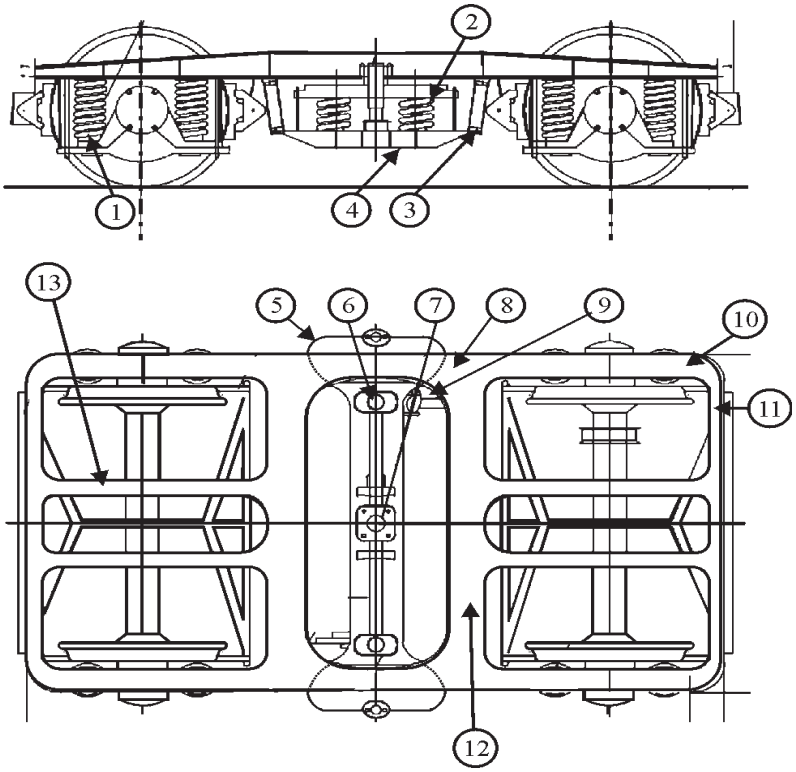

1. Axle Box/Primary Spring	2. Bolster /Secondary Spring	3. Swing Link/Hanger
4. Lower Spring Beam	5. Bolster	6. Side Bearer
7. Centre Pivot	8. Bogie Frame	9. Anchor Link
10. Sole Bar	11. Head Stock	12. Transom
13. Longitudinal bar		

Figure 3: ICF All-Coil Bogie – General Arrangement

2.0 Primary Suspension

2.1 Dashpot Arrangement

The primary suspension in an ICF Bogie is through a dashpot arrangement which is mainly a cylinder piston arrangement. Schematic arrangement is as shown in Figure 4. The lower spring seat sits on the washers (Rubber or HYTREL) and plays the role of a cylinder in the dashpot arrangement which is filled with oil. In the dashpot arrangement, the top portion is called the axle box guide. The axle box guide is welded to the bogie frame. The axle box guide works as a piston in the Lower spring seat filled with oil. This helps in damping the vibrations caused

during running train operation. The bottom of the axle box guide has a guide cap with perforations so that during the downward movement of the axle guide in the lower spring seat, the oil in the dashpot rushes in the axle box guide. This provides the dampening of vibration in a running coach.

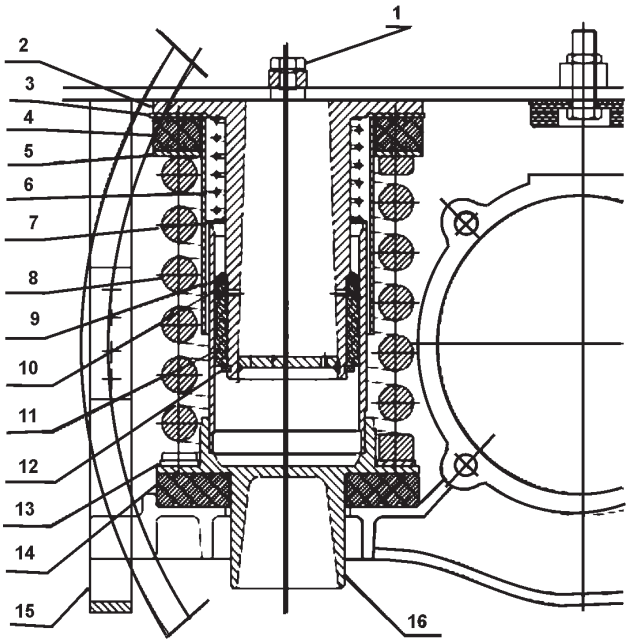

1.Screw with sealing washer	2. Guide	3. Protective tube
4. Upper Rubber washer	5. Top spring seat	6. Dust shield spring
7. Dust shield	8. Helical Spring	9. Guide ring
10. Rubber packing ring	11. Guide bush	12. Circlip
13. Compensating ring	14. Lower Rubber washer	15. Safety strap
16. Lower spring seat		

Figure 4: Axle Guide with Dash Pot

This type of rigid axle box guide arrangement eliminates any longitudinal or transverse relative movement between the axles and the bogie frame, through provision of bronze bushes at the lower end of the axle guide, and transmits lateral and longitudinal forces.

Oil level (above top of guide cap) is measured by insertion of a flexible wire through the hole. A lower oil level would result in decrease in damping, which would adversely affect comfort and safety. The oil level should not be below 40mm (BG) in tare condition.

Table 1: Common Defects found in Axle Guide Assembly and their causes:

Sr. No	Defect	Reasons
1	Perished rubber packing ring	Poor quality of Rubber packing ring.
2	Axle guide found worn on one side.	i) Misaligned fitment of axle guides to bogie frame. ii) Dust ingress to lower spring seat.
3	Lower spring seat surface worn	
4	Guide ring broken	i) Axle guide is hitting lower spring Seat. ii) Weld joint of lower spring seat and tube is porous or cracked
5	Guide cap securing assembly broken.	
6	Lower spring seat scored and dent mark on guide cap.	
7	Leakage from lower spring seat	

2.2 Primary Spring

Helical springs are provided in the Primary suspension, called Axle Box spring. Their details are included under item 11.0.

3.0 Secondary Suspension

The secondary suspension arrangement of the ICF bogies is through bolster springs. The bogie bolster is not bolted or welded anywhere to the bogie frame. It is attached to the bogie frame through the anchor link. Weight of the coach is transferred through side bearers on the bogie bolster. The ends of the bogie bolster rests on the bolster helical springs placed over the lower spring beam suspended from the bogie frame. A photograph of the Secondary Suspension arrangement is shown in Figure 5.

3.1 Lower Spring Beam

The bolster springs are supported on a lower spring beam. The lower spring beam is also a free-floating structure. It is not bolted or welded either to the bogie frame or the bogie bolster. It is attached to the bogie frame on the outside with the help of a steel hanger. They are called the BSS (Bolster Springs Suspension) Hangers.

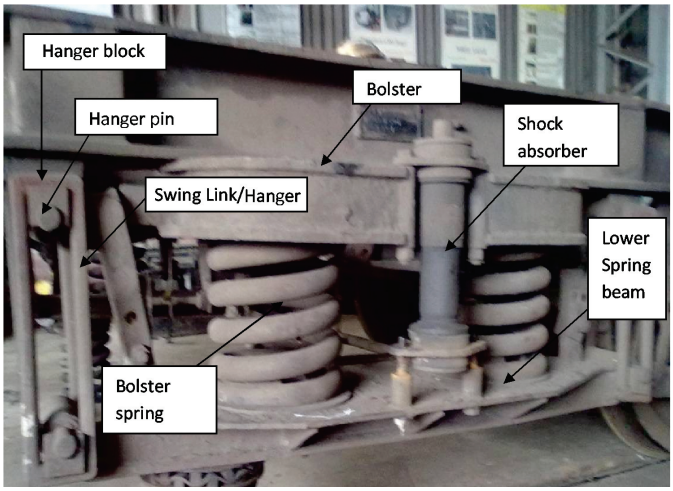

Figure 5: ICF All-Coil Bogie – Secondary Suspension

3.2 Equalising Stay Rod

This device has been provided on bogies between the lower spring plank and the bolster to prevent lateral thrust on the bolster springs which have not been designed to take the lateral forces. It is a double Y-shaped member fabricated using steel tubes and sheets. The equalizing stay rod is hinged on one end with the lower spring beam and on other end with the bogie bolster with the help of brackets welded to the bogie bolster and therefore can swivel freely. A photograph of Equalising stay and Anchor link arrangement is shown in Figure 6 and 7.

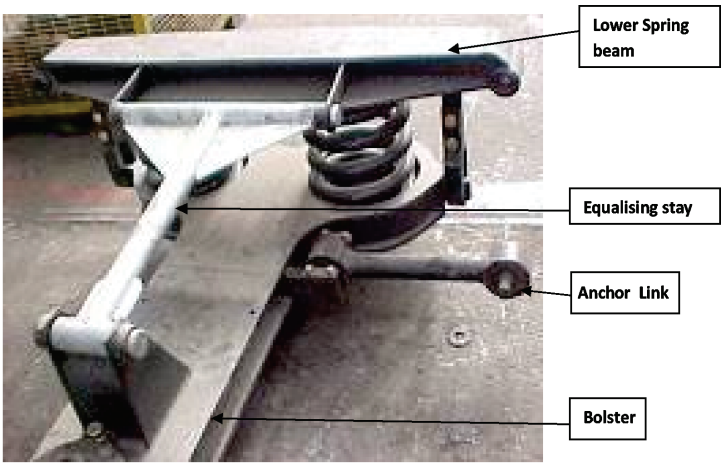

Figure 6: Equalising Stay Arrangement (Upside down view): Old Design.

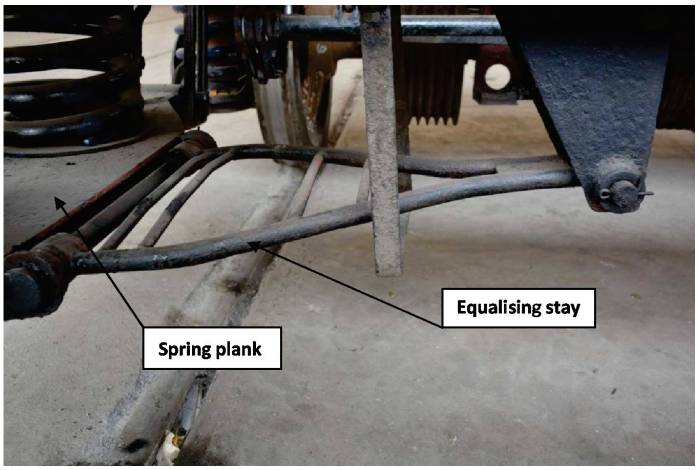

Figure 7: Equalising Stay Arrangement: Modified Design

Equalising Stay Rod should be checked for any brakage in its connection to bolster and lower spring beam.

3.3 Anchor Link

The floating bogie bolster which supports the coach body is held in position longitudinally by the anchor links which are pinned to the bolster sides and the bogie Transoms. One anchor link is provided on each side of the bolster diagonally across. (Figure 8 and 9).The links can swivel universally (both vertically and laterally) to permit the bolster to rise and fall and sway side wards. They are designed to take the tractive and braking forces. The anchor links are fitted with silent block bushes, in order to reduce the jerks during acceleration/ braking. The silent block is force fit in the anchor link and the silent block pin is slide fit in the anchor link bracket.

A broken Anchor Link would result in eccentric transfer of longitudinal load, causing increased angular run and lateral forces.

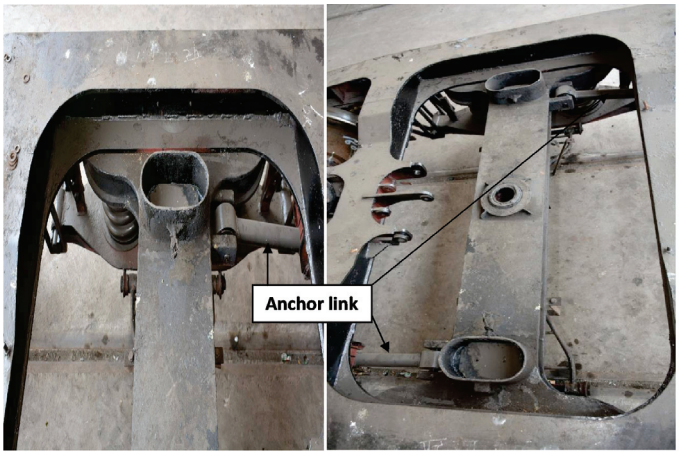

Figure 8: Anchor Link

Defects in Anchor Link:-

i. Check the condition of the anchor link, for being worn or corroded or found cracked (normally at weld joints).

ii. Inspect the silent block, for rubber perished (indicated by fretting) or loose in the anchor link housing, or the silent block pin is worn thin or loose in silent block rubber.

iii. No coach should be permitted to run with broken anchor links.

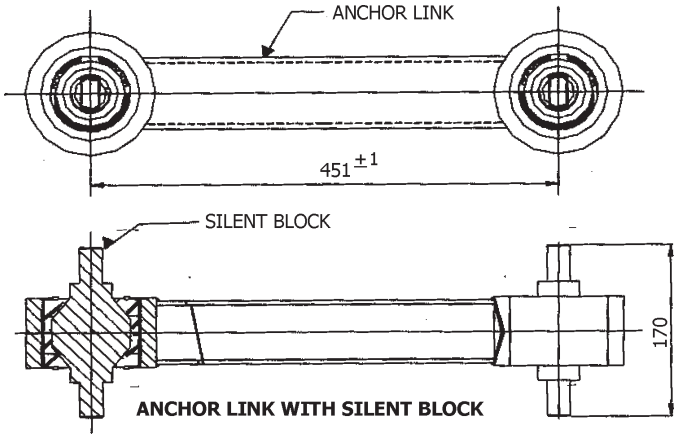

Figure 9: Anchor Link
(Dimension in mm)

3.4 Swing Link /Hanger

Swing Link/Hanger is an important component of bogie as it transfers both vertical and lateral loads at the secondary suspension stage (Fig. 5). Due to swivel action, wear occurs on the Hanger block and inside surface of Hanger. Any tendency of jamming of swing links (at points of articulation in bogie frame and spring plank) during lateral swing would result in occurrence of higher flange forces (Y) and higher lateral accelerations in the coach. Wear limits of Hanger block and limit of clearance inside length of Hanger are stipulated. Upon exceedence of the limits, these components are replaced. Else, chances of failure of Hanger would be high. Swing link is a vulnerable component. Hence, its failure should be observed at the derailment site.

Defects in Swing Link:-

i. Check swing links for crack, wear on the rocking surfaces and elongation. If there is any sign of elongation or cracking or when the total wear exceeds 3mm the swing link is to be scrapped.

ii. The maximum permissible wear on diameter of hanger pin/bush is 1.5mm.

iii. Check swing link hanger blocks for any wear.

3.5 Secondary Spring

Helical springs provided in the Secondary suspension are called secondary springs. The details are included in item No.11.0.

3.6 Shock Absorber

Two Hydraulic shock absorbers (one on each side), having a capacity of ± 600 kg at a speed of 10 cm/sec. are fitted to work in parallel with the bolster springs to provide damping for vertical oscillations. Leakage of oil and physical damage are the common items to be observed. In case such defects are observed, it is to be checked whether damping force versus frequency of oscillation is as per the stipulation.

4.0 Centre Pivot

The centre pivot pin (Figure 10 and 11) joins the body with the bogie and transmits the tractive and braking forces on the bogies. It does not transmit any vertical load. It is equipped with rubber silent block bushes which tend to centralise the bogie with respect to the body and to some extent, controls and damps the angular oscillations of the bogie. During assembly, graphite grease is applied on the Centre Pivot Pin to reduce friction and it is secured with a cotter and pin arrangement.

Defects in centre pivot :-

i. Check whether pivot is damaged bent or cracked.

ii. Check the condition of bolts holding pivot to body is secured and tight.

iii. Cotter and cotter pin at pivot bottom are secured.

iv. Check verticality of pivot pin.

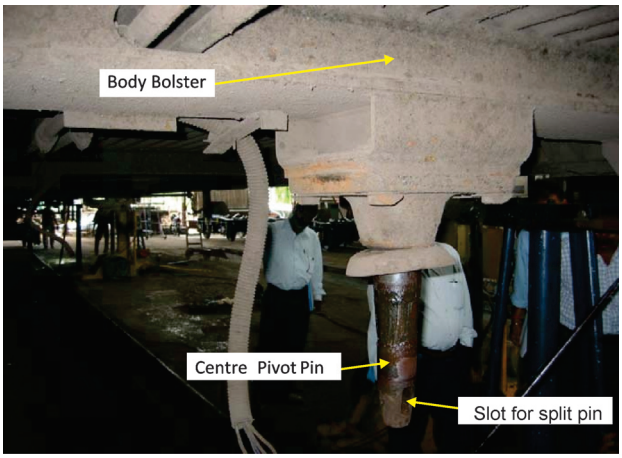

Figure 10: Centre Pivot Pin

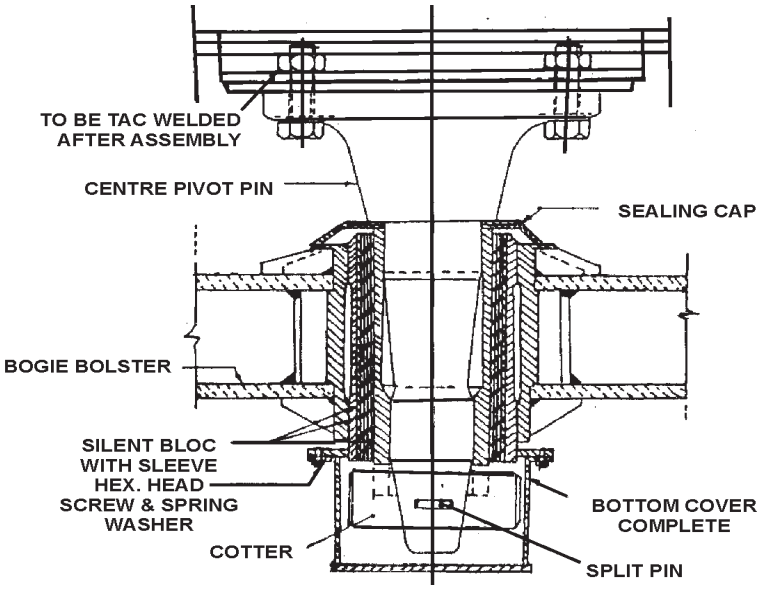

Figure 11: Centre Pivot Pin

5.0 Side Bearers

The side bearer arrangement (Figure 12 to 15) consists of a machined steel wearing plate immersed in an oil bath and a floating bronze-wearing piece with a spherical top surface kept in it on both sides of the bogie bolster. In Figure 13, wearing plate and spherical bronze wearing piece are shown separately outside the oil bath for clarity. Figure 14 shows these components in their position within side bearer. The coach body rests on the top spherical surface of these bronze-wearing pieces through the corresponding attachments on the bottom of the body-bolster (Figure 15). The whole arrangement is provided with a cover to prevent entry of dust in the oil sump.

Obstruction to bogie rotation increases vulnerability to derailment, particularly in sharp curves, to a very large extent.

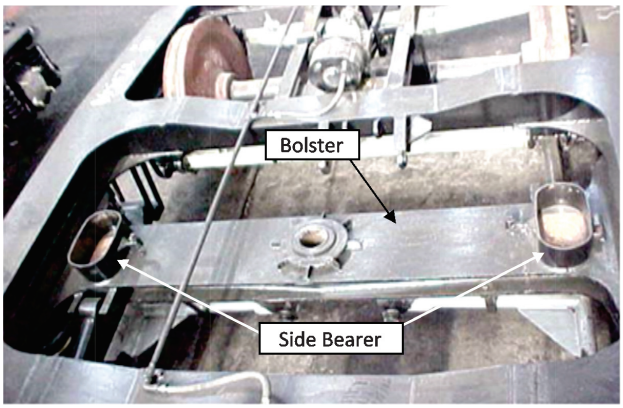

Figure 12: Side Bearer Assembly on Bogie Bolster.

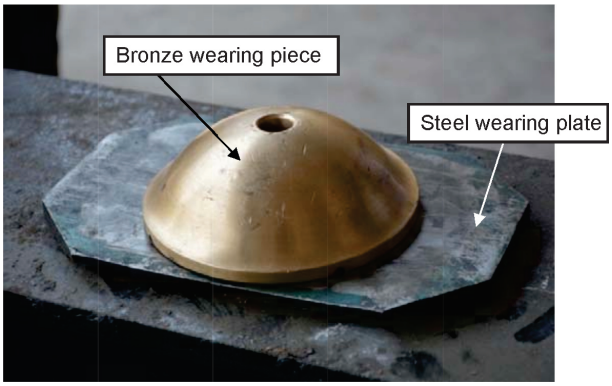

Figure 13: Steel Wearing Plate and Floating Bronze Wearing Piece Kept Outside

Defects in Side Bearer:-

i. Steel wearing plate of the side bearer should be checked for wear and sharp corners

ii. Steel wearing plate wear limit -1.5mm (when it reaches thickness of 8.5mm). For high speed ICF All-Coil coaches wear limit is 1.0mm.

iii. Bronze Wearing Piece to be replaced when the height reduces to 42mm (3mm wear). For high speed ICF All-Coil coaches wear limit is 1.5mm.

iv. Leakage of oil from the side bearer oil bath welding portion.

Figure 14: Steel Wearing Plate and Floating Bronze Wearing Piece Kept Within Side Bearer.

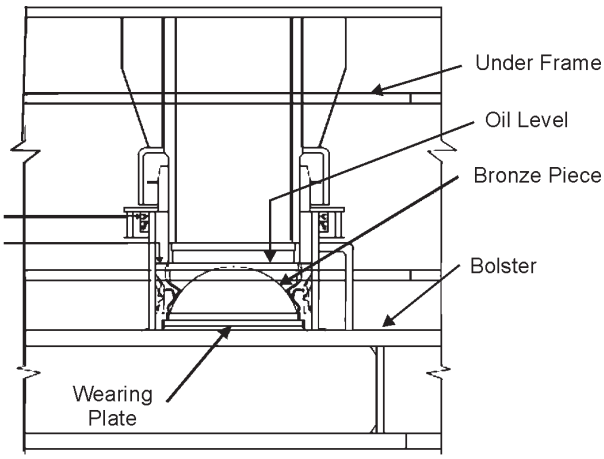

Figure 15 : Side Bearer Arrangement

6.0 Bogie Bolster and Bogie Frame

6.1 Bogie Bolster

A bogie bolster is the central section of the bogie that carries the entire weight of a coach's under frame. It is a free-floating member, which transfers the weight of the coach body to the bogie frame.

Defects in Bogie Bolster Arrangement:-

i. Check Bolster for twist, crack.

ii. Check Equalizing stay bracket for bent, damage.

iii. Check Anchor link bracket for damage.

6.2 Bogie Frame

Defects to be checked in Bogie Frame:-

i. Trolley frames visibly out of square or damaged.

ii. Cracks/damages in the bogie frame and brackets attached to bogie frame.

iii. Check the squareness and alignment of BSS brackets and axle guides with the help of transverse, longitudinal, diagonal gauges and straight edge.

7.0 Roller Bearing (Double Row Self Aligned Spherical Roller Bearing)

The bearing is housed in the axle box housing. Lithium based grease of approved brand is filled in the axle box housing. The front cover for the axle box is placed on a housing which closes the axle box. The front cover is bolted by using torque wrench.

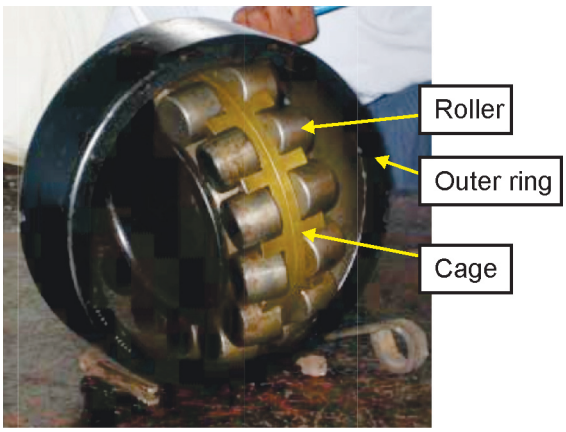

Figure 16: Spherical Roller Bearing

Defects in Bearings:-

Defects in bearing are likely to result in hot axle condition. Hot axle is a condition under which the actual temperature of axle box becomes higher than normal operating temperature, which is about 70 degree centigrade. Hot axle condition should be checked at site by feeling the temperature of axle box, check for any cracks in axle box cover and spillage of grease.
Defects which are likely to cause the above condition are as under:-

i Improper and/or excessive/inadequate grease.

ii Bearing clearance not within prescribed limits.

iii Journal finish and Diameter not as prescribed in the drawing.

iv Excessive or inadequate lateral clearance between axle box covers and bearings.

v Too little or too much gap between rollers and roller ring.

(This can be checked by using feeler gauge. Put the feeler gauge in between the roller ring and the outer surface of the roller and check the gap. For acceptable gaps, CS -3, of 12/2007 to Maintenance Manual for BG coaches of ICF Design may be referred to.)

8.0 Brake Gear

On application of brakes, the brake pressure on the two wheels of an axle should be more or less equal; otherwise, the wheel which is braked less would tend to travel more, causing the axle to become angular. The axle would, thus, run persistently angular during the brake application.
Conditions which could cause the above situation to occur are:

-Brake block deficient.

-Incorrect centralization and adjustment of brake rigging and brake blocks.

-Uneven application of brake power and wear in gear.

-Uneven wear of brake blocks on the same axle.

Defects in Braking System:-

i. Inspect the condition of brake beam / levers for wear or damage.

ii. The corroded, dented, damaged brake shoe head.

iii. Check the wear, damage, etc. to the brake gear pins.

iv. Check the weak and damaged brake shoe key, if any.

v. The composite brake blocks should not have worn out to thickness of 12 mm or below.

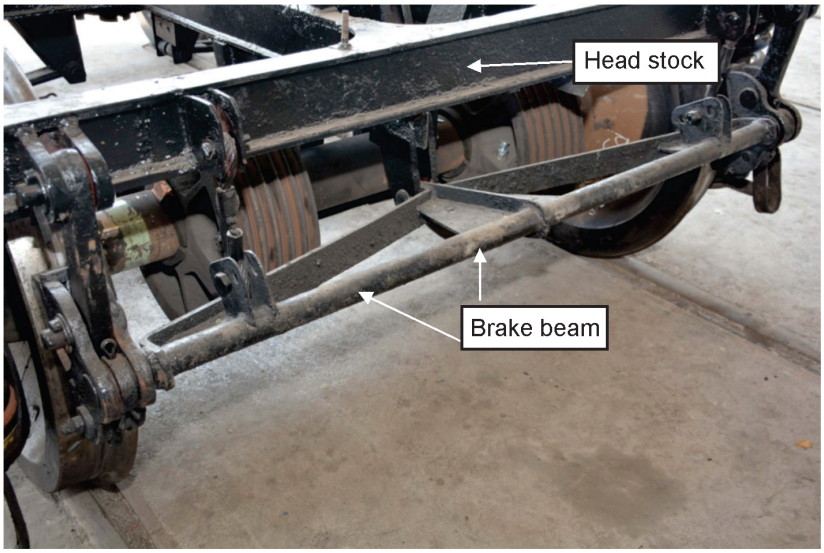

Figure 17: Brake Gear Assembly

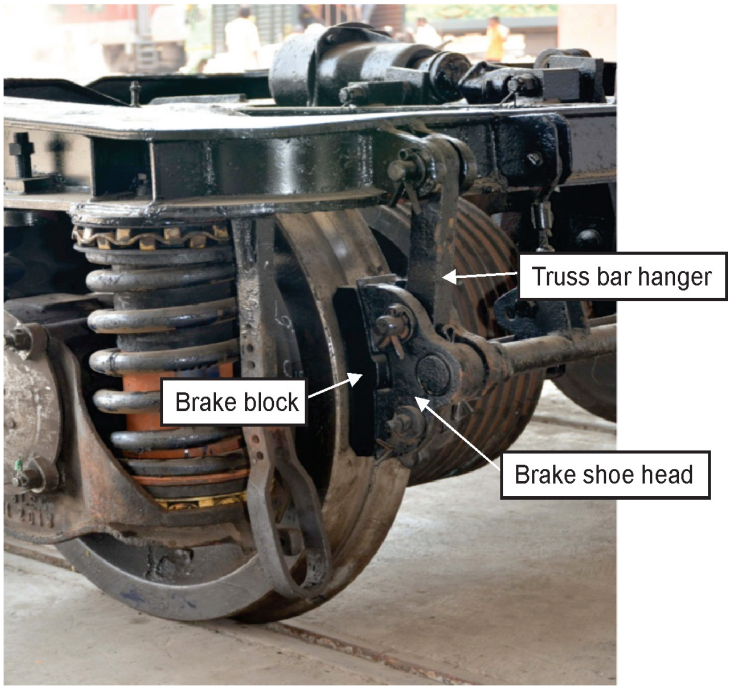

Figure 18: Brake Gear Assembly

9.0 Buffing Gear

(a)Buffer Height:

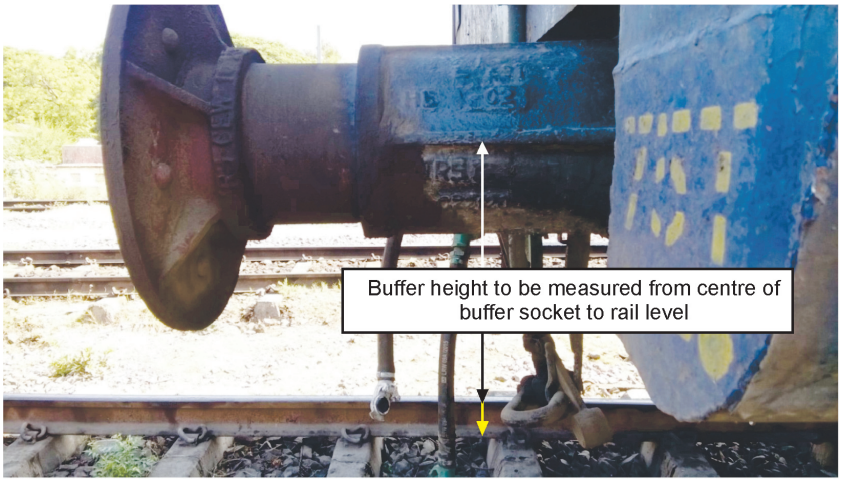

Figure 19: Measurement of Buffer Height

- Maximum buffer height = 1105 mm (In empty condition)
- Minimum buffer height = 1030 mm (In loaded condition)
- Minimum buffer height of coaching stock should not be less than 1090 mm at the time of releasing of coach from POH Workshop.
- For checking irregular loading :
  - Difference in buffer height from rail level between any two bufers on the same vehicle measured at headstock should not be more than 64mm.
  - Flange of any wheel should not be within 25mm of bottom of vehicle.

- The measurement should be taken from the centre of the buffer socket to the top of the rail head. The buffer height should never be taken from the centre of the buffer face because it will not give correct value.

- While recording buffer height, it should be ensured that buffer bolts are in tight condition and buffer is not drooping. If it is drooping, the amount of drooping should be measured and recorded.

(b) Buffer Projection Limits from Head Stock

Maximum	635 mm
Minimum	584 mm

(c) Displaced Buffer

- Buffer displaced 38 mm in any direction from its normal position in case of coaching stock is called displaced buffer.

10.0 Wheel and Axle Assembly

WHEEL DEFECTS

Figure 20.1 : Tyre Defect Gauge

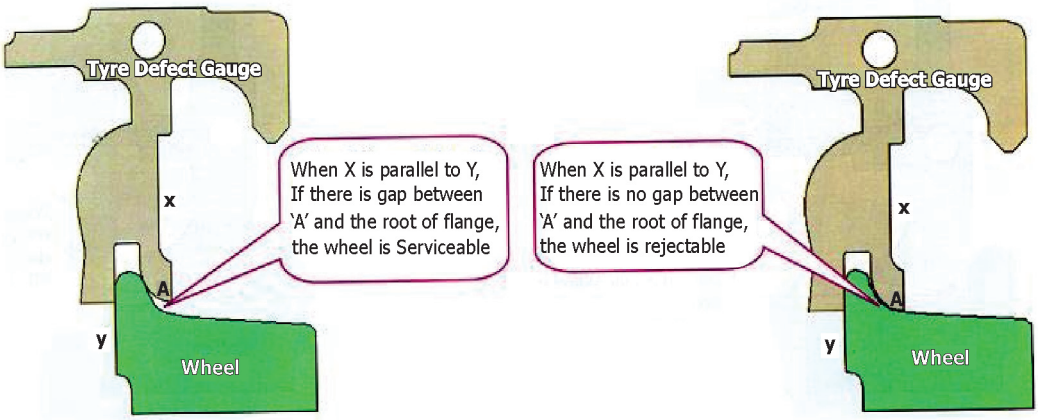

Figure 20.2: (i) Thin flange

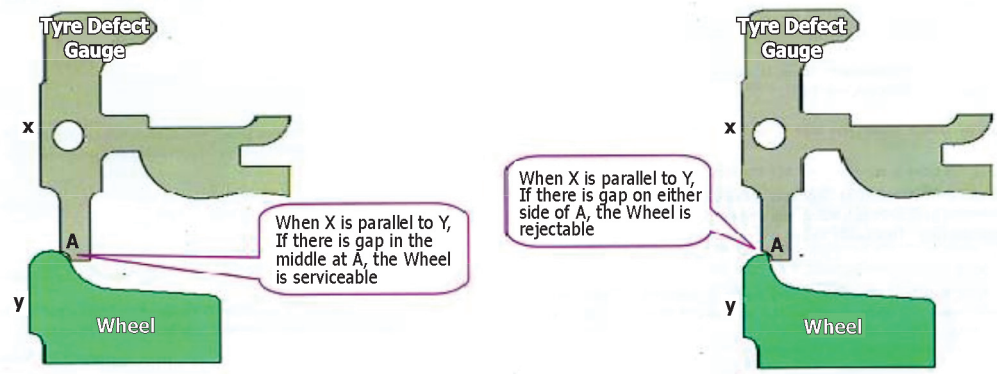

Figure 20.3: (ii) Sharp flange

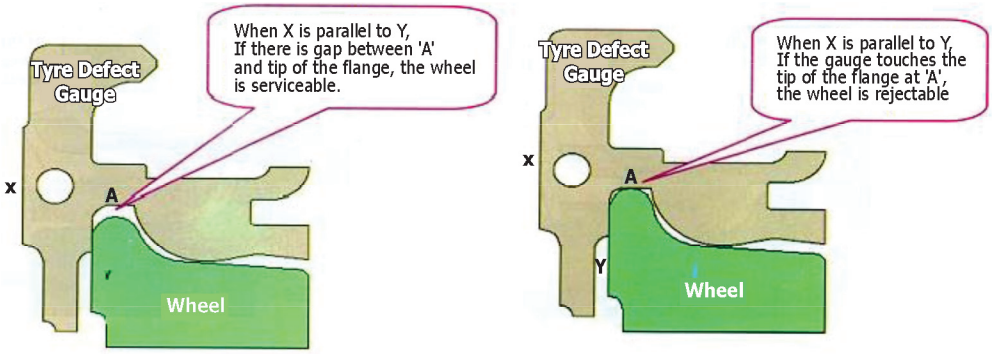

Figure 20.4: (iii) Deep flange

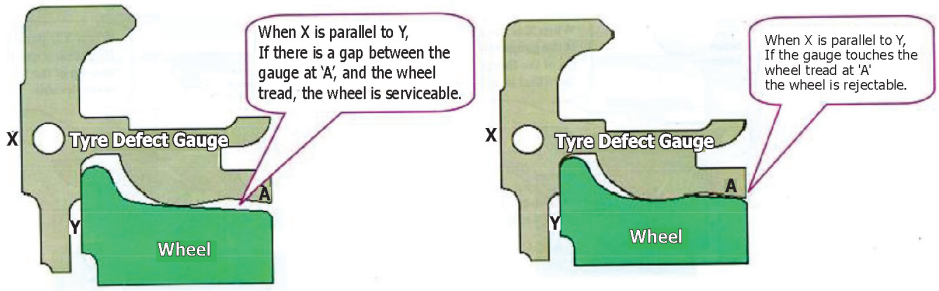

Figure 20.5 :(iv) Hollow Tyre / False Flange

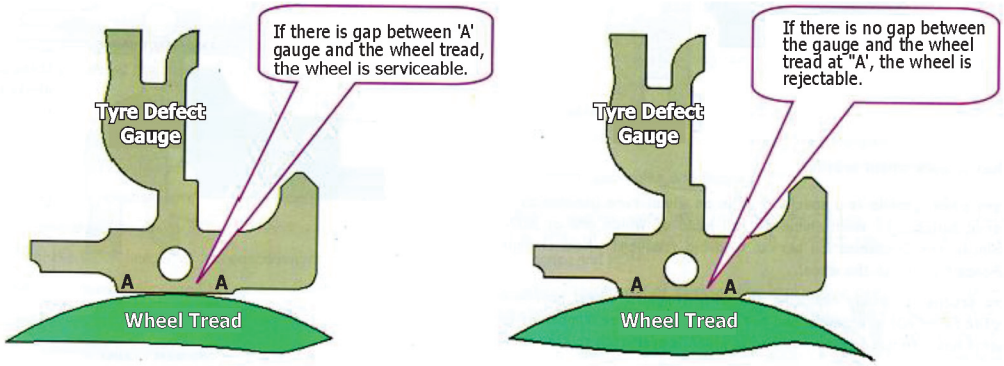

Figure 20.6: (v) Flat Tyre

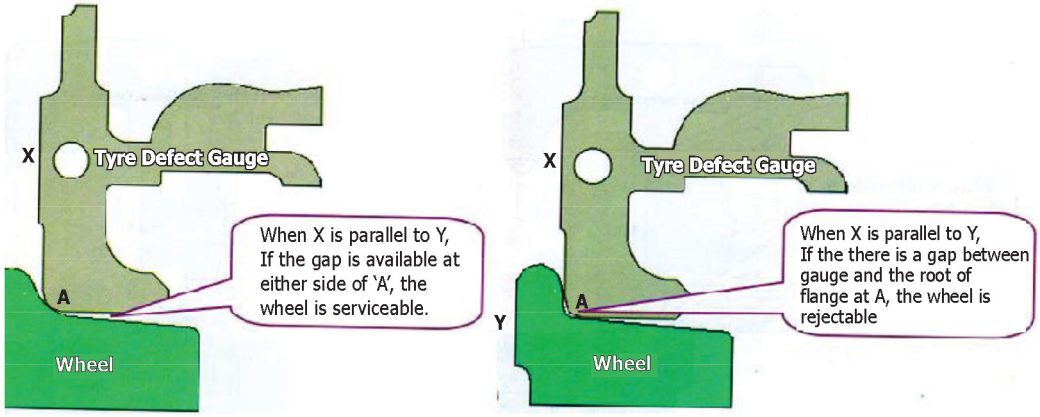

Figure 20.7: (vi) Worn Root

(a) Wheel Tread Defects (Table 2) :-

Wheel Defects	Causes
(i) Thin Flange	When the flange thickness reduces from 28.5mm (New) to less than 16 mm (Condemn), then the flange is called thin flange. Flange thickness is measured at a depth of 13 mm from the tip of the flange. For Coaches of mail/Exp (Speeds 110 kmph and above) this limit is 22mm instead of 16mm. **Repercussion: -** Thin flange requires greater flange-way gap which may not be available resulting in possibility of damage to the tongue rail.
(ii) Sharp Flange	When the radius given at the tip of flange is worn out from 14.5mm (New) to less than 5 mm (Condemn) is called Sharp Flange. **Repercussion: -** Chances of bursting of point due to entering of sharp flange between Tongue rail and stock rail.
(iii) Deep Flange	The New height of the flange is 28.5mm, when it increases to greater than 35mm is called Deep Flange **Repercussion: -** Shearing of fish plate bolts at rail joints.
(iv) Hollow Tyre/ False Flange	When the projection of outer edge of the wheel tread below the hollow of tyre exceeds 5mm then the worn tread is called Hollow Tyre and outer edge of wheel is called False Flange **Repercussion: -** A False Flange may split open points while travelling in trailing direction as the False Flange may tend to get wedged in between the tongue and the stock rail. Wheel with the false flange may also mount on nose of crossing in facing direction.
(v) Flat Tyre	Flatness on wheel circumference is called Flat Tyre. For Coaching Stock it is allowed up to 50 mm **Repercussion: -** Chances of rail fracture due to hammering effect on rail.
(vi) Worn Root	New Radius of flange at the root is 16R, when it is reduced to less than 13R, the condition is called as Worn Root. **Repercussion: -** Excessive lateral play result in chances of mounting of flange over rail.

-Wheel Sets should be free from defects such as Wheel shifted on axle, Tyre loose, cracked or broken. Wheel should also be free from defects such as cracks in web portion, thermal cracks and shelling on tread surface or spread Rim.

(b) Wheel Gauge:

There should be no variation in the values of wheel gauge -measured at four points 90 degrees apart on a wheel set. However the actual value of the wheel gauge can vary as per tolerances given in Table (IRCA Part III Para. 2.8.7)

Standard	1600mm
Maximum	1602mm
Minimum	1599mm

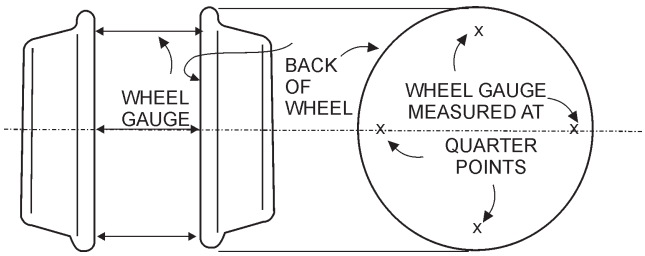

Figure 20.8 : Wheel Guage

Measurement of Wheel Gauge and recorded duly indicating the following:

- Tightness or slackness of gauge
- Whether any indication exists about shifting of wheel on the axle.

  Note: It must be ensured that the back surfaces of wheels are cleaned thoroughly before measuring the wheel gauge in order to avoid erroneous readings.
- If the wheel gauge is more than permissible limit, there exists a possibility of a relatively newer wheel hitting the nose of crossing.
- If the wheel gauge is less than minimum value, there is a possibility of wheel hitting at the back of a tongue rail while passing through the switch and thus damaging the tongue rail.
- Wheel gauge to be checked in no load condition.

(c) Bent Axle:

A bent axle starts wobbling during motion causing severe vibrations. In order to confirm whether an axle is bent or not, it must be checked carefully on a sensitive machine or measuring table.

(d) Wheel Diameter on Tread.

Wheel diameter is measured on the tread at a distance of 63.5 mm from the inside face of the wheel. Two measurements 180 degrees apart should be taken for each wheel.

Same axle	Same bogie	Same coach
0.5mm	5mm	13mm

Wheel Diameter New = 915mm
Condemn size = 825mm

Note: Variation in tread diameter on the same axle as specified is at the time of tyre turning. Effect on safety of any variation beyond this limit should be analysed on case to case basis.

11.0 Helical Spring

Drawing number and free height, loaded height and Grouping details of spring for BG Main Line coaches is shown in Table 4, 5 and 6. Springs should be grouped in three groups as shown in the Table 5 and 6 depending upon their height under test load. Spring groups are to be marked as per the color- code: A - Yellow, B - Oxford Blue, C – Green. For pairing, springs should be selected from the same group. Same group of spring is to be used on a particular bogie.

Defects in Coil Springs:-

I) Visual Inspection of all coils for cracks, dents or hitting marks.

ii) All the springs should be from same category (i.e. A, B, C) on primary suspension and secondary suspension separately i.e. category of primary and secondary may be different.

iii) Defective/Mismatched spring are likely to result in variation in vertical clearances.

Important Vertical clearances are stipulated for various ICF coaches. These are explained in Figure 21. These clearances are:-

a) **Bogie Frame Bolster Clearance** (marked as ‘C’) i.e. between Top of Bolster and bottom of Side Frame.

b) **Body Bogie Clearance** (marked as ‘D’) i.e. between Top of Side Frame and bottom of coach body.

c) **Crown Clearance** (marked as ‘X’) i.e. between Axle Box crown and bottom of Side Frame.

Stipulated values are as per Table 3. Abnormal variation in these clearances may be caused by either defects in springs or excess/ uneven load. In such situations, the cause should be thoroughly investigated.

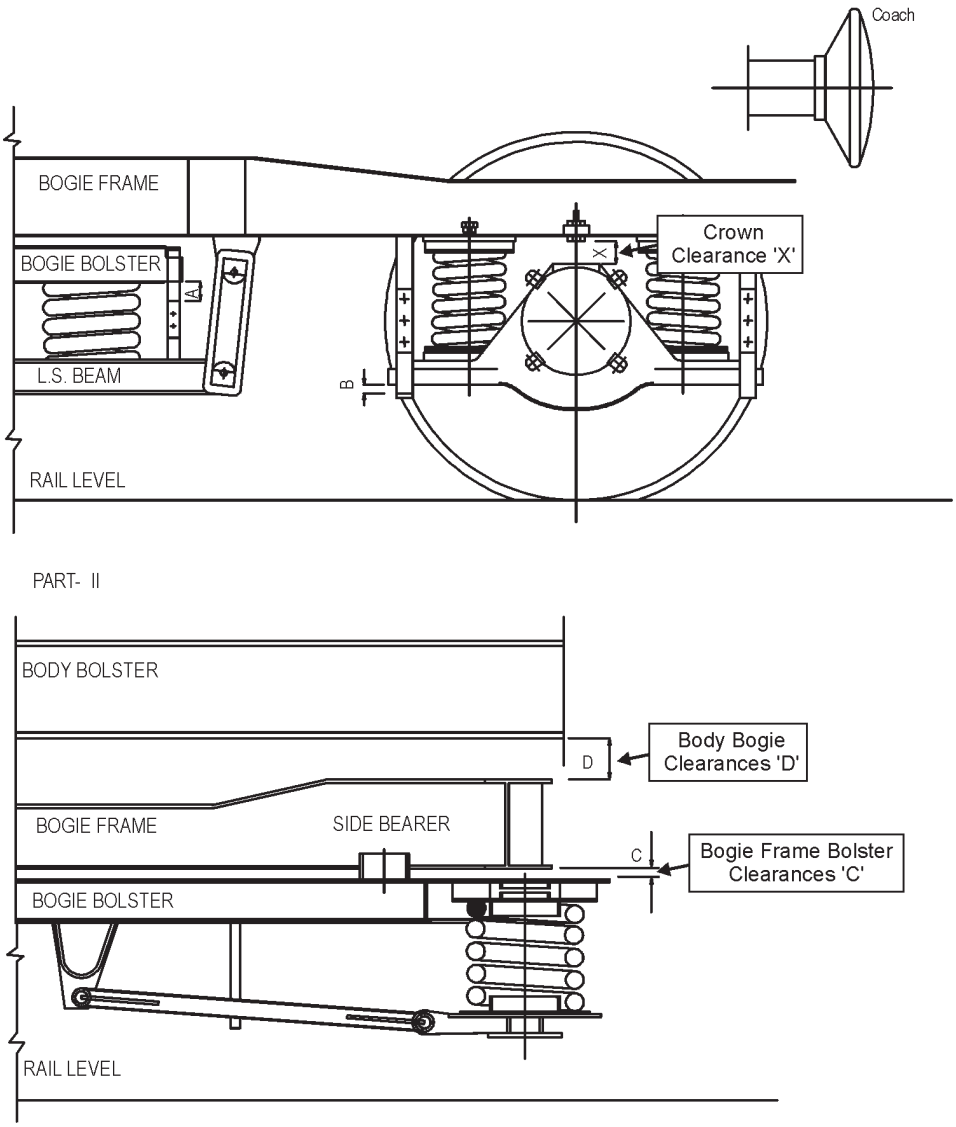

Figure 21: Important Vertical Clearances for ICF All-Coil Bogie

Table 3 : Testing parameters (Important vertical clearances in mm)

Type of Coach	Bogie Frame Bolster Clearance (C)		Body Bogie Clearance (D)		Crown Clearance (X)	
	Tare	Gross	Tare	Gross	Tare	Gross
FOR AC COACHES (RCF DRAWING NO. AW90017)						
ACCW(EOG)	40±5	50±5	70±3	60±3	28±3	20±3
ACCW(SG)	40±5	50±5	70±3	60±3	30±3	22±3
ACCN(EOG)	40±5	54±5	70±3	56±3	34±3	22±3
ACCN(SG)	40±5	53±5	70±3	57±3	35±3	23±3
ACCZ(EOG)	40±5	54±5	70±3	56±3	32±3	20±3
ACCZ(SG)	40±5	56±5	70±3	54±3	35±3	22±3
FACZ(EOG)	40±5	50±5	70±3	60±3	27±3	19±3
RA(NON AC)	40±5	44±5	70±3	66±3	20±3	17±3
VP(HIGH CAPACITY)	40±5	81±5	70±3	29±3	36±3	11±3
IRQ ACCN(SG)	40±5	54±5	70±3	56±3	35±3	23±3
RA AC	40±5	43±5	70±3	67±3	22±3	19±3
FOR NON AC COACHES (RCF DRAWING NO. CC90019)						
GS	40±5	74±3	70±3	36±3	47±3	20±3
SOC	40±5	81±5	70±3	29±3	50±3	18±3
SCN	40±5	57±5	70±3	53±3	31±3	17±3
SLR	40±5	79±5	70±3	31±3	50±3	20±3
VP	40±5	77±5	70±3	33±3	39±3	11±3
IRQ SCN	40±5	57±5	70±3	53±3	30±3	17±3
Postal Van	40±5	49±5	70±3	61±3	22±3	15±3

Table 4 : Drawing Code of Springs for ICF BG Coaches (Ref. RDSO Amendment Slip no.5 of Sept 2001 to STR WD-01-HLs-94) (Rev.1 May 95)

Type of spring	Type of bogies	ICF Drg.No.	Drg.Code No.
Axle Box	All Non AC ICF Type	F-0-1-006	A01
	All AC ICF type	WTAC-0-1-202	A03
	Power car	WLRRM2-0-1-202	A04
	Double decker	DD-0-1-001	A06
	High capacity Power Cars	WLRRM8-0-1-802	A09
	High capacity parcel van	RDSO/SK-98017	A10
Bolster	All Non AC ICF type	F-0-5-002	B01
	All AC ICF type	WTAC-0-5-202	B03
	Power car	WLRRM2-0-5-202	B04
	Double decker	DD-0-5-003	B06
Bolster	High capacity Power Car	WLRRM8-0-5-802	B11 and B 13
	High capacity parcel van	RDSO/SK-98018	B15 and B 16

Table 5: Grouping of Axle Box Spring

Code	Free Height (mm)	Test load (Kg)	Acceptable Height under test load (mm)	Groups as per loaded spring height (mm)		
				A (Yellow)	B (Oxford Blue)	C (Green)
A01	360	2000	279-295	279-284	285-289	290-295
A03	375	2800	264-282	264-269	270-275	276-282
A04	372	3000	265-282	265-270	271-276	277-282
A06	337	2400	269-284	269-273	274-279	280-284
A09	360	3000	277-293	277-282	283-288	289-293
A10	315	1800	276-289	276-279	280-284	285-289

Table 6: Grouping of Bolster Spring

Code	Free Height (mm)	Test load (Kg)	Acceptable Height under test load (mm)	Groups as per loaded spring height (mm)		
				A (Yellow)	B (Oxford Blue)	C (Green)
B01	385	3300	301-317	301-305	306-311	312-317
B03	400	4800	291-308	291-296	297-303	304-308
B04	400	6100	286-304	286-291	292-297	298-304
B06	416	4200	280-299	280-286	287-292	293-299
B11/ B13	386	6700	306-322	306-311	312-317	318-322
B15/B16	393/286	6000	256-272	256-261	262-267	268-272

12.0 Coach Body

i. The underframe members should not be cracked/bent/corroded. Components like sole bar and trough floor which are not visible from both sides should be examined by tapping with a spiked hammer. (A component will require repair/ replacement, if it has lost more than 20% of it's thickness)

ii. Particular attention should be paid to the more vulnerable members and locations listed below:-

- Sole bar, body pillars, turn under and tubular frame/ trough floor below lavatories in all types of coaches and the luggage compartments of all SLRs and parcel vans.
- Sole bars, body pillars, turn unders and pillars above lifting pads
- Sole bars and pillars behind the sliding door pockets of SLRs and parcel vans.
- Sole bars, pillars and turn unders at the door corners and near coach body bolster.
- Head stock.

13.0 Check list of important items for derailment investigation

SN	Item of Inspection	Measurement Equipment/ Method	Permitted Range/Condition
1	Oil Level in Hydraulic Dashpot.	Dip stick	Should not be below 40mm in tare condition.
2	Axle guides	Visual Inspection/Dial Bore Gauge/ Trammel Gauge	• Check the condition. • The maximum permissible clearance between the guide bush and the casing 1.0mm by Dial Bore Gauge. • Check the bogie frame by Trammel Gauge.
3	Equalizing Stay Road	Visual Inspection	Any breakage in its connection to bolster and lower spring beam.
4	Anchor Link	Visual Inspection	• Check the condition for any wear, crack. • Check the condition of silent block, if the rubber is perished or loose in the anchor link housing, or the silent block pin is worn, thin or loose in silent block rubber. • Check for missing or broken anchor link.
5	Swing Link (BSS Hanger); Hanger Pin; Hanger Block	Go No Go Gauge/Visual Inspection	• Hanger: If there is any sign of elongation, cracking or when the inside length at the centre exceeds more than 3mm swing link is to be condemned. New size-384 mm, condemning size 387mm. • Hanger Pin: Maximum permissible wear is 1.5mm. • Hanger Block: Check the condition of swing link hanger block and wear. Maximum permissible wear is 1.5mm.
6	Centre Pivot	Visual Inspection	• Check whether the pivot is damaged, bent or cracked. • Check whether the bolts holding the pivot to the body are secure and tight. • Cotter Pin at the pivot bottom should be secure. • Check the verticality of the pivot pin

SN	Item of Inspection	Measurement Equipment/ Method	Permitted Range/Condition
7	Side Bearers	Vernier/Height Gauge/Visual Inspection	• Steel wearing plate thickness to be checked for wear and sharp edges/corners. Permitted wear is 1.5mm (New size 10mm, condemn 8.5mm) • Height of the bronze wearing piece-wear permitted 3mm (new size 45mm condemn 42mm). • Oil level should be sufficient such that the sliding surfaces are well lubricated.
8	Roller bearings	Visual Inspection/ Feeler Gauge/ Non- Contact Thermometer	• Feeling temperature of Axle Box for Hot Axle. • Improper / excessive/inadequate grease. • Journal finish and Diameter not as prescribed in the drawing. • Excessive or inadequate lateral clearance between axle box covers and bearings. • Too little or too much gap between rollers and roller ring and the outer surface of the roller and check the gap with Feeler Gauge. Acceptance gap as per CS-3, of 12/2007 to Maintenance Manual for BG Coaches of ICF design.
9	Brake Gear	Visual Inspection	• Check the condition of brake beam/levers for wear or damage. • Check brake shoe head and brake gear pin for corrosion, dent or damage. • Check the brake shoe key for any damage. • Brake blocks should not have worn out to thickness of 20 mm or below.
10	Buffer Height	Visual Inspection/ Buffer Height Gauge.	• Check that buffer bolts are tight and buffers are not drooping. • Buffer Height: - Minimum = 1030mm - Maximum = 1105mm
11	Wheel defects. (Thin Flange,	Tyre Defect Gauge (Go No Go Gauge)	Check wheel tyre profile with Tyre Defect Gauge as shown in Para 10:- • Thin Flange- Flange thickness reduces to less than 16mm. Wheel with flange less than

SN	Item of Inspection	Measurement Equipment/ Method	Permitted Range/Condition
	Sharp Flange, Deep Flange, Hollow Tyre/False Flange, Flat Tyre, Worn Root)		22mm thick is not permitted to run on high speed train. • Sharp flange- Radius at flange tip reduces to less than 5mm. • Deep flange-Height of the flange becomes greater than 35mm. • Hollow Tyre/False Flange- Projection of outer edge of the wheel tread below the hollow of tyre exceeds 5mm then the worn tread is called Hollow Tyre and outer edge of wheel is called False Flange. • Flat Tyre- Flatness of wheel circumference is 50mm or more. • Worn Root: Root radius reduces to less than 13mm.
12	Wheel Gauge	Wheel Gauge	• Maximum =1602mm • Minimum =1599mm
13	Wheel Tread Diameter	Wheel Diameter Gauge	• Maximum=915mm • Minimum= 825mm
14	Difference in Wheel Tread Diameter	Wheel Diameter Gauge	• On the same axle=0.5mm • Same bogie=5mm • Same coach=13 mm
15	Springs	Visual Inspection/ Measurement with Height Gauge/Go No Go Gauge.	• No Broken/ weak springs permitted • Springs to be subjected to load deflection test. • Groups of spring: All the springs should be from the same category (A, B, C) on primary and secondary suspension. Loaded and Free Height of springs should be as per Table 5 and 6. • Vertical clearances viz Bogie Frame Bolster Clearance (C), Body Bogie Clearance (D) and Crown Clearance (X): measured values should be within stipulated limits given in Table 3.
16	Coach Body	Visual Inspection	• Corrosion in Sole bar • Condition of Head stock • Condition of Under-frame members -should not be cracked/bent/corroded.

Item No.14.0 - Guidance for filling of accident proforma circulated vide Railway Board letter No.2018/Safety(A&R)/1/8 dated 25.01.2019, on "Revision and Standardization of Observation/ Measurement of Accident Investigation / Inquiry".

SN As per latest performa for carriage	Items of Inspection	Measurement Instrument/ method	Permitted Range/ conditions to be observed	Reference in this book
2	Date of incident & time	As per actuals	As per actuals	----------
3	Train No	As per actuals	As per actuals	----------
4	Details of BPC along with the name of the station, where issued and Engineer C & W who issued it.	As per actuals	To be checked for validity. BPC is valid up to 3500 km or 96 Hrs whichever is earlier	----------
5	Vehicle No	As per actuals	As per actuals	----------
6	Type	As per actuals	As per actuals	----------
7	Tare in tones	As per actuals	As per actuals	----------
8	Carrying capacity in tones	As per actuals	Check for overloaded condition.	----------
9	Built date	As per actuals	As per actuals	----------
10	Return date	As per actuals	• To be checked to find whether coach is running over due POH. • POH Periodicity for newly built coaches - 24 months • Others - 18 months.	----------
11	POH Details	As per actuals	As per actuals	
12 & 13	Station (from-to)	As per actuals	As per actuals	----------
14	Position from the engine.	As per actuals	As per actuals	----------
15	Wheel Gauge in mm (to be measured at three locations) measured in empty condition at the horizontal plane passing through the center of the axle.	Wheel Gauge	1600+2 1600-1	Page No 20, item 10 (b)

SN As per latest performa for carriage	Items of Inspection	Measurement Instrument/ method	Permitted Range/ conditions to be observed	Reference in this book
16(i) 16(ii)	Wheel Diameter Measurement Record whether below condemning size (Yes/ No)	Wheel Diameter gauge	• Maximum= 915mm • Condemn = 825mm • On same axle = 0.5mm • On same Boggie = 5mm • On Same Coach = 13mm	Page No 21 Item 10 (d)
17	Any indication of bent axle or wheel having shifted on axle	Visual, Wheel Gauge	• Measure the wheel gauge on minimum three locations 120 degree apart on the wheel set. • Variation in the reading indicate bent axle. • However actual value of the wheel gauge ca be vary in different wheel set in a range of 1600+2 and 1600-1	Page No 20, Item 10 (c)
	Wheel and axle face particulars in case of breakage of wheel/ axle.	visual	Actual conditions to be recorded	----------
18	Axle face particulars. In case of breakage of any axle/wheel. 1L-1R, 2L-2R, 3L-3R, 4L-4R	visual	Actual conditions to be recorded	----------
19	Ultrasonic particulars on the hub of the disc in case of breakage of any axle/ wheel. 1L-1R,2L-2R,3L-3R, 4L-4R	visual	Actual conditions to be recorded	----------
20	Stamping particulars on wheel disc regarding manufacture RA/RD in case of breakage of any axle/ wheel. 1L-1R, 2L-2R, 3L-3R, 4L-4R	Visual	Actual conditions to be recorded	----------

SN As per latest performa for carriage	Items of Inspection	Measurement Instrument/ method	Permitted Range/ conditions to be observed	Reference in this book
21	Observation after measuring the profile with wheel defect gauge. (Good/Reject able) (L)	Tyre Defect Gauge (Go No Go Gauge	Check wheel tread profile with Tyre Defect Gauge.	Page No 16, 17, 18 Item 10(a)
22	Observation after measuring the profile with wheel defect gauge (Good/ Reject able) (R)	Tyre Defect Gauge (Go No Go Gauge	Check wheel tread profile with Tyre Defect Gauge.	Page No 16, 17, 18, 19 Item 10(a)
23	Condition of axle box rear and front covers/end cap (FIAT)	NA	NA	NA
24	Roller bearing- Condition of face cover plate.	Visual	Properly secured in place.	Page No 12, 13, item 7.0
25	Condition of bearing seal & studs/locking plate and bolts (FIAT)	NA	NA	NA
26	Condition of roller bearings and its components	Visual	Good	Page No 12, 13 item 7.0

SN As per latest performa for carriage	Items of Inspection	Measurement Instrument/ method	Permitted Range/ conditions to be observed	Reference in this book
27	Condition of coil suspension spring, i.e. Normal/ Fractured (Old/ Fresh)	Visual Inspection/ Measurement with Height Gauge, Go-NoGo Gauge	• No Broken/ weak springs permitted • Springs to be subjected to load deflection test. • Groups of spring: All the springs should be from the same category (A, B, C) on primary and secondary suspension. Loaded and Free Height of springs should be as per Table 5 and 6.	Page No 21-25 Item 11.0
28	Condition of Rubber spring i.e. Normal/Cracked including length of crack, (For LHB only)	NA	NA	NA
29	Condition of air spring including leakage in pipe.	Visual inspection	• All the fasteners must be properly tightened. • There should be no leakage in air joints. • Check the installation lever for its correct position and tighten properly.	----------
30	Deflected height of coil spring after re-railing on level un-canted track	Measuring tape/ steel rule	Look for packing plate to match the height of the spring.	----------

SN As per latest performa for carriage	Items of Inspection	Measurement Instrument/ method	Permitted Range/ conditions to be observed	Reference in this book
31	Crown clearance (Vertical)	Measuring tape/ steel rule	Must be within prescribed limit	Page No 22, 23 Table -3
32	Bogie frame- Bolster clearance (Vertical)	Measuring tape/ steel rule	Must be within prescribed limit	Page No 22, 23 Table -3
33	Body Bogie clearance (Vertical)	Measuring tape/ steel rule	Must be within prescribed limit	Page No 22, 23 Table -3
34	Condition of Rubber Disc and Bump stop of primary suspension (For LHB)	NA	NA	NA
35	Height of Bogie bolster base plate from rail level (For LHB)	NA	NA	NA
36	Swing Link (BSS Hanger); Hanger Pin; Hanger	Go No Go Gauge/Visual Vernier caliper	• New size-384 mm • Condemning size 387mm. • Hanger Pin: Max. Permissible wear is 1.5 mm. • Check for broken and elongated hanger	Page No 8 Item 3.4
37	Condition of Equalizing Stay Road	Visual Inspection	Any breakage in its connection to bolster and lower spring beam.	Page No 5 item 3.2
38	Condition of Anchor Link	Visual Inspection	• Check the condition for any wear, crack. • Check for the condition of salient block.	Page No 6, 7 Item 3.3
39	Condition of control arm, Rubber element and Bore (For LHB)	NA	NA	NA

SN As per latest performa for carriage	Items of Inspection	Measurement Instrument/ method	Permitted Range/ conditions to be observed	Reference in this book
40	Condition of Axle guide Cum Dash pot including oil level.	Visual Inspection/ Dip stick/ Dial Bore Gauge/ Trammel Gauge.	• Oil level should not be below 40 mm in tare condition. • Check the condition of the pot. • The maximum permissible clearance between the guide bush and the casing 1.0mm by Dial Bore Gauge. Check the bogie frame by Trammel Gauge.	Page No 2, 3, 4 Item 2.1
41	Condition of Hydraulic Dampers	Visual inspection	Check the vertical shock absorber for Physical damage and leakage of oil.	Page No 8 Item 3.6
42	Condition of Anti-roll bar (For LHB)	NA	NA	NA
43	Condition of Centre Pivot including verticality of Pivot pin	Visual Inspection	• Check whether the pivot is damaged, bent or cracked. • Check whether the bolts holding the pivot to the body are secure and tight. • Cotter Pin at the pivot bottom should be secure. • Check the verticality of the pivot pin. • Check for the condition of lubrication.	Page No 8, 9 item 4.0

SN As per latest performa for carriage	Items of Inspection	Measurement Instrument/ method	Permitted Range/ conditions to be observed	Reference in this book
44	Side Bearers	Vernier/Height Gauge/Visual Inspection	• Steel wearing plate thickness to be checked for wear and sharp edges/ corners. Permitted wear is 1.5mm (New size 10mm, condemn 8.5mm) • Height of the bronze wearing piece-wear permitted 3mm (new size 45mm condemn 42mm). • Oil level should be sufficient such that the sliding surfaces are well lubricated.	Page No 10, 11 item 5.0
45	Condition longitudinal /lateral flexibility of secondary spring (For LHB)	NA	NA	NA
46	Clearance between Traction center and Longitudinal /Lateral Bump stop (for LHB)	NA	NA	NA
47	Remarks regarding free movement of bolster and pivot and their condition	Visual	Free movement to be ensured	Page No 8 Item 4.0
48	Condition of grounding cables , Wheel slip Protection (WSP), and speed sensor (For LHB)	NA	NA	NA

SN As per latest performa for carriage	Items of Inspection	Measurement Instrument/ method	Permitted Range/ conditions to be observed	Reference in this book
49	Brake Gear	Visual Inspection	• Check the condition of brake beam/levers for wear or damage. • Check brake shoe head and brake gear pin for corrosion, dent or damage. • Check the brake shoe key for any damage. • Brake blocks should not have worn out to thickness of 12 mm or below.	Page No 13 Item 8.
50	Buffer/ coupler Height (to be taken on an un-canted track after uncoupling and re railing) in mm - Front	Visual Inspection/ Buffer Height Gauge.	• Check that buffer bolts are tight and buffers are not drooping. • Buffer Height: - Min = 1030 mm - Max = 1105 mm	Page No 15, item 9.0
51	Buffer/ coupler Height (to be taken on an uncanted track after uncoupling and re railing) in mm - Rear	Visual Inspection/ Buffer Height Gauge	• Check that buffer bolts are tight and buffers are not drooping. • Buffer Height: - Min = 1030 mm - Max = 1105 mm	Page No 15, item 9.0
52	Condition of side buffers Working, dead, drooping, and entanglement.	Measuring tape/Steel rule	• Buffer projection limits from the head stock - Max = 635 mm - Min = 584 mm	Page No 15, item 9.0 (b)

SN As per latest performa for carriage	Items of Inspection	Measurement Instrument/ method	Permitted Range/ conditions to be observed	Reference in this book
53	Details of broken parts giving locations w.r.t point of mount and derailment and whether breakage considered due to Accident.	Visual.	As per actuals	----------
54	Any other defect in the vehicle which may have contributed to or caused the derailment such as condition of the coupler, draft gear pocket, shearing plate etc.	Visual.	As per actuals	----------
55	List of damages to the coach due to accident.	Visual.	As per actuals	----------
56	Other observations considered relevant to derailment.	Visual.	As per actuals	----------

****